FCB4N2 Quick Instruction Guide

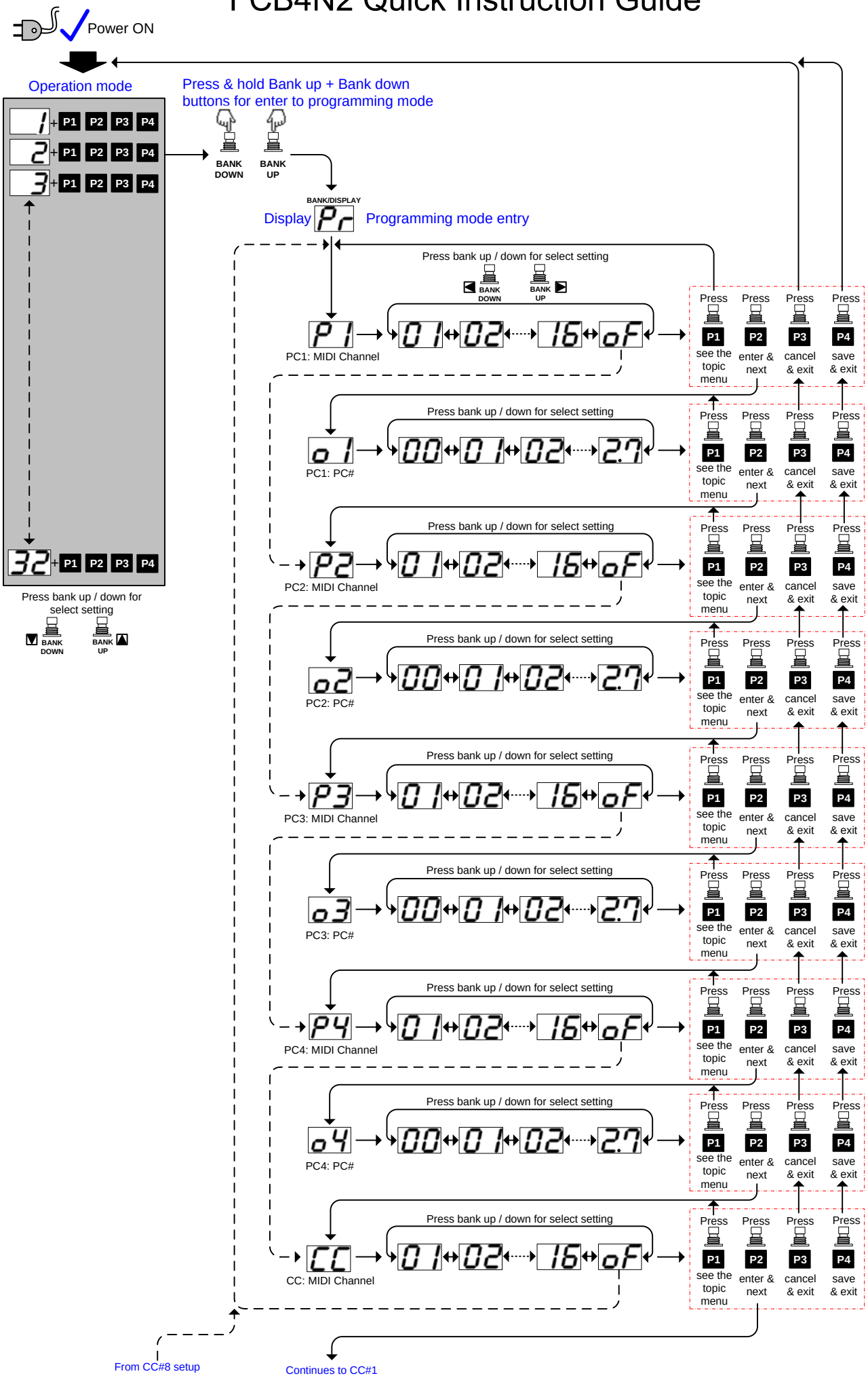

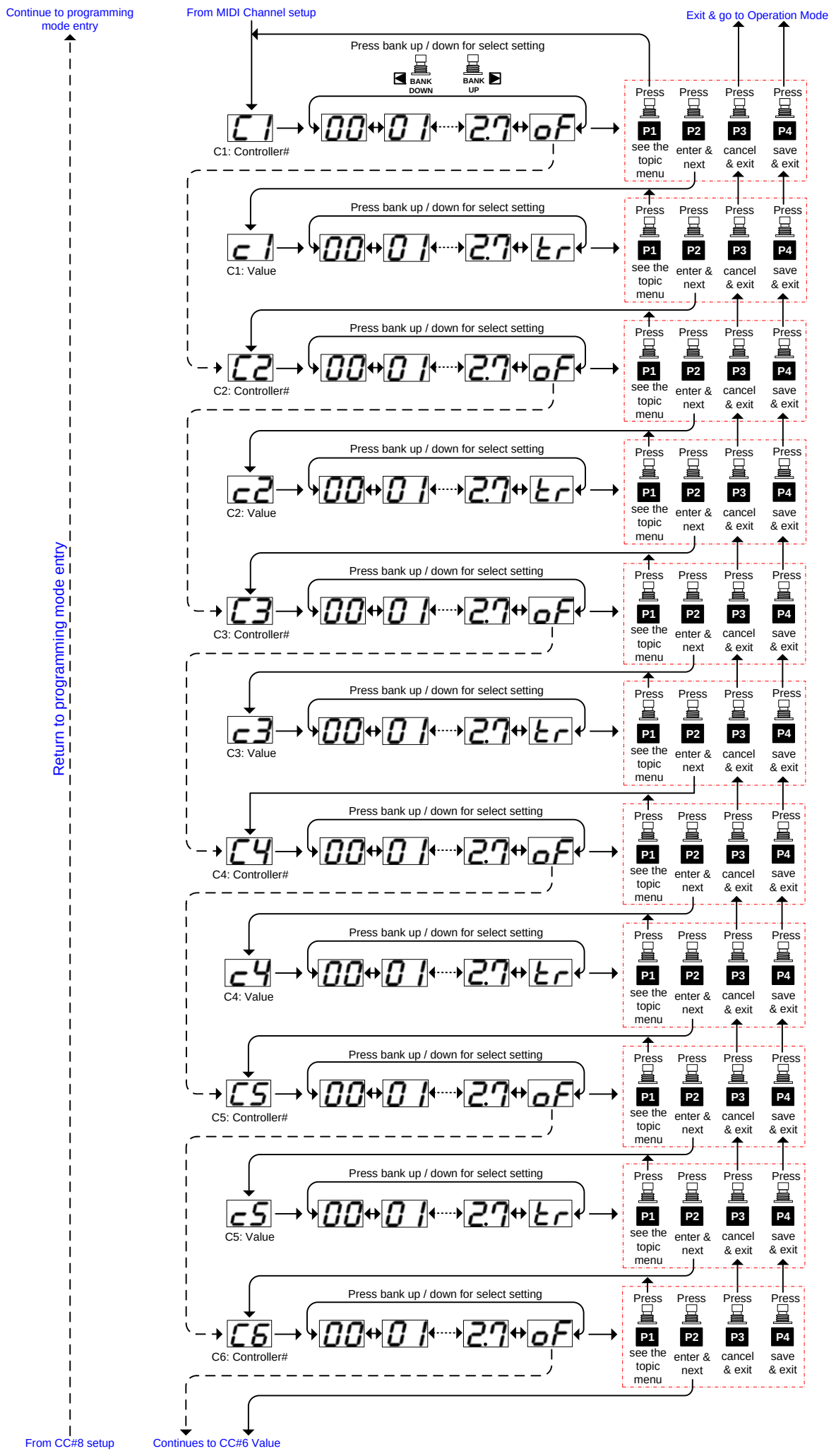
Continue to programming mode entry
From MIDI Channel setup
Exit & go to Operation Mode
Press bank up / down for select setting
BANK DOWN
BANK UP
C1: Controller#
C1: Value
C2: Controller#
C2: Value
C3: Controller#
C3: Value
C4: Controller#
C4: Value
C5: Controller#
C5: Value
C6: Controller#
Press
P1
see the topic menu
P2
enter & next
P3
cancel & exit
P4
save & exit
Return to programming mode entry
From CC#8 setup
Continues to CC#6 Value

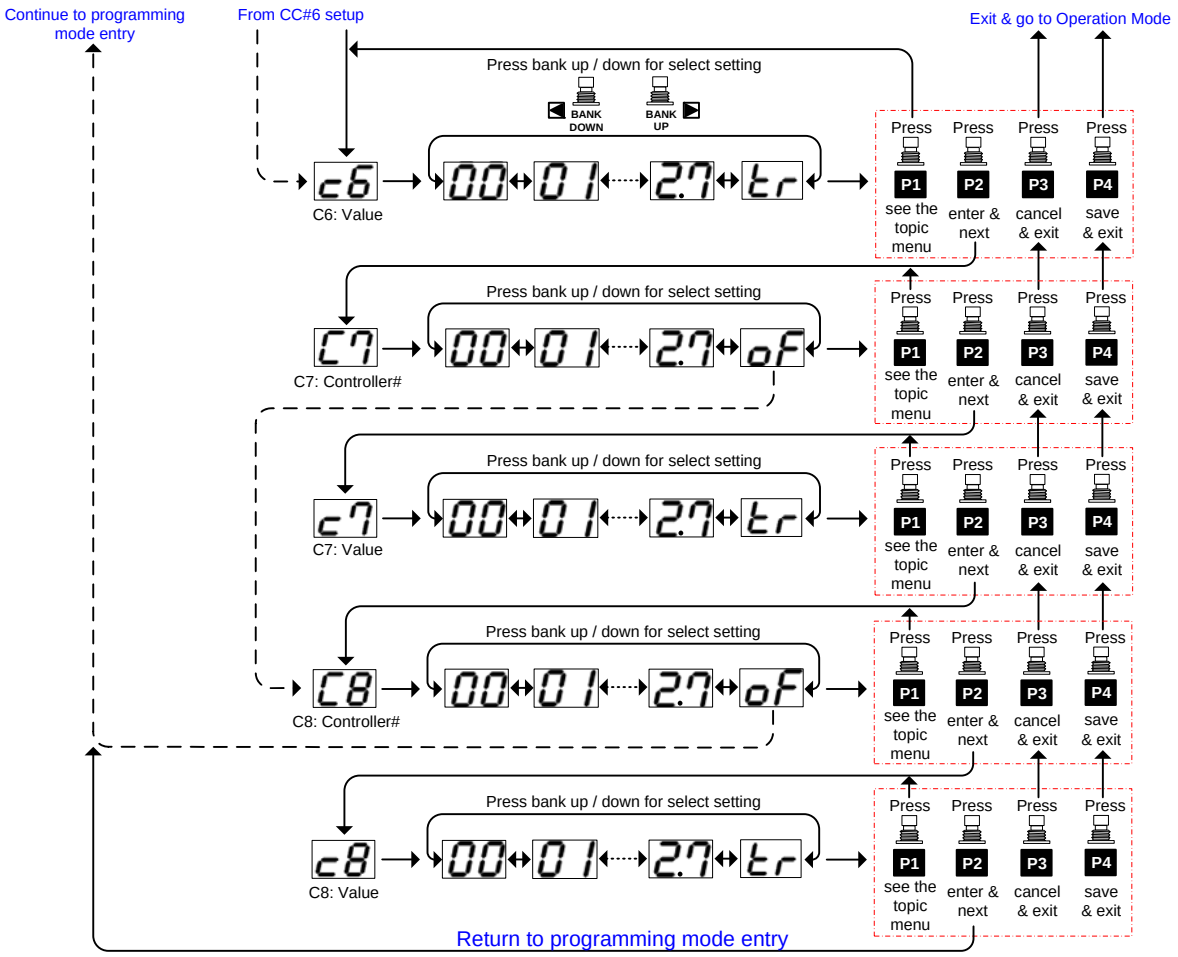
Continue to programming mode entry
From CC#6 setup
Exit & go to Operation Mode
Press bank up / down for select setting
BANK DOWN
BANK UP
C6: Value
C7: Controller#
C7: Value
C8: Controller#
C8: Value
Press
P1
see the topic menu
P2
enter & next
P3
cancel & exit
P4
save & exit
Return to programming mode entry